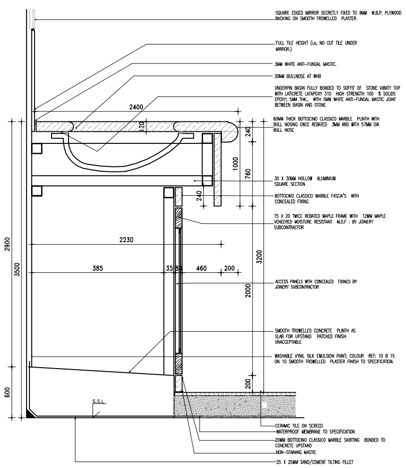

2. DETAIL THROUGH VANITY UNIT

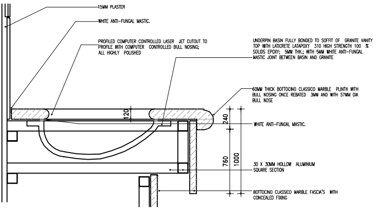

3 SECTION THRO VANITY COUNTER WORKTOP AT BASIN

GENERAL NOTES FOR VANITY COUNTER MARBLE AND GRANITE WORKS

1. ALL DIMENSIONS TO BE VERIFIED ON SITE BEFORE COMMENCING ALL THE WORKS
2. ALL DIMENSIONS ARE IN MM
3. ALL EXTERNAL ANGLES OF MARBLE/ GRANITE TO BE MITRED, EPOXY BONDED, CHAMFERED 5 X 5 MM AND POLISHED. ALL MARBLE / GRANITE IN THE SAME PLANE PANELS TO HAVE 1 X 1MM CHAMFER AT ALL JOINTS THUS:
4 R.C. UPSTAND WALL WITHIN DUCT TO SUPPORT WALL HUNG W.C. AND BIDET
5 MAIN CONTRACTOR ONLY TO USE ONE OF THE APPROVED STONE SUBCONTRACTORS FOR THE SUPPLY AND FIXING OF MARBLE AND GRANITE (STONE) WORKS
6 ALL EXPOSED EDGES AND NOSINGS OF MARBLE GRANITE WORKS TO BE HIGHLY POLISHED TO MIRROR FINISH
7 MARBLE WORKS TO BE PREPARED OFF SITE. CONTRACTOR TO USE TEMPLATES TO ESTABLISH CORRECT SITE SIZE.
8 CONTRACTOR TO FORM ALL HOLES IN MARBLE AND GRANITE FOR ALL SERVICES INCLUDING NOSINGS TO OPENINGS FOR COUNTER WHB'S
9 FULL SIZE MOCK-UP OF STONE WORKS TO EACH TYPE OF WASHROOM AND WET AREA TO BE FABRICATED BY THE CONTRACTOR TO THE SATISFACTION OF THE ENGINEER BEFORE PROCEEDING FURTHER WITH THE WORKS
10 MARBLE AND GRANITE TO BE SELECTED FOR COLOUR HUE AND PATTERN CONSISTENCY WITHIN EACH ROOM. COLOUR, HUE AND PATTERN SHALL NOT DEVIATE FROM TOLERANCES ACCEPTABLE TO THE ENGINEER
11 CONTRACTOR TO ALLOW FOR ALL CUT OUTS IN MARBLE / GRANITE FOR ALL SERVICE PENETRATIONS, INCLUDING ALL ANGLE VALVES
12 REFER TO SANITARYWARE SCHEDULE FOR TYPE OF MARBLE / GRANITE IN EACH BATHROOM
13 ALL EXPOSED DUCT AND VANITY COUNTER SURFACES TO BE CLAD WITH MARBLE / GRANITE
14 MARBLE / GRANITE FACIAS EXTEND 50MM BEHIND BATHTUB BELOW PHENOLIC DUCTS
15 ALL WORKS TO RECEIVE 2 COAT APPLICATION OF PENETRATING SEALER AS BY MARBLE RENEWAL OF UAE, P.O. BOX 4057 SHARJAH (TEL.06 5345200,FAX 06 5345201), AND SELECTED FOR MARBLE TYPE TO PREVENT STAINING:APPLIED AND FINISHED BY MARBLE RENEWAL OF UAE TO SATISFACTION OF THE ENGINEER
16 CONTRACTOR TO PREPARE, SUBMIT, AMEND AS NECESSARY AND OBTAIN APPROVALS FOR SHOP DRAWINGS FOR ALL MARBLE, GRANITE AND STONE WORKS PRICE TO COMMISSION WORKS INCLUDING FOR ALL FIXING ACCESSORIES AND FINISHING ITEMS SUCH AS COMPATIBLE GROUTS, ANGLES, BRACKETS AND LEGS

SPECIFICATIONS:

Cubicles system made of TRESPA panels which are phenolic resin based SOLID GRADE COMPACT LAMINATE in 13mm thk. suitable for wet areas [TRESPA Athlon, structure quartz (sanitary grade)] Scope of supply consists of doors, posts, dividing panels and overhead alu. railing. Each cubicles complete with hinges, privacy thumbturn with red / white indicator, door knob, toilet roll holder (only in toilet) and coat hook.

TRESPA panels are rated to have FIRE RESISTANCE in accordance to BS 476 part 7, 1987 TOP RAIL: Manufactured using high quality extruded alu. section according to spec. 6063 FINISH: Polyester powder coated in standard ral colours to BS 6496 SUPPORT FOOT: Made of solid nylon panel clamp and steel adjuster with stainless steel cover tube and base cover

All hardwares are in nylon finish and cream colour
All fixing brackets are aluminium and polyester powder coated to white
All fixing screws are stainless steel
OVERALL HEIGHT : 2000 ±10mm. OVERALL WIDTH : ACCORDING TO LAYOUT
OVERALL DEPTH : ACCORDING TO LAYOUT DOOR WIDTH,
OPENING : 700mm.
DOOR UNDER PANEL CLEARANCE : 150 ±20mm
FRONT PANEL : TRESPA HPL, COLOUR: E0-00(WHITE)
DIVIDING PANEL : TRESPA HPL, COLOUR: E0-00(WHITE)
DOOR PANEL : TRESPA HPL, COLOUR: E0-00(WHITE)
All dimensions are in millimetres

M:\01_Projects\D2232 Airport\001_ADMIN-BUILDING\09_WD Shedules\TOILET2.jpg

AMERICAN SPECIALITIES,INC.
PAPER TOWEL DISPENSER AND WASTE RECEPTACLE INSTALLATION DRAWING
TOTAL - 1NO.

AMERICAN SPECIALITIES,INC.
PAPER TOWEL DISPENSER AND WASTE RECEPTACLE

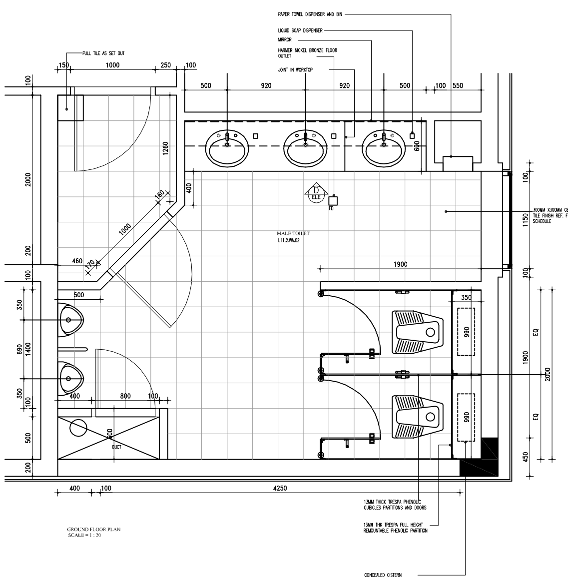

GROUND FLOOR PLAN
SCALE = 1 : 20

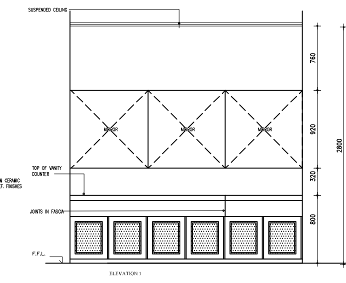

ELEVATION 1

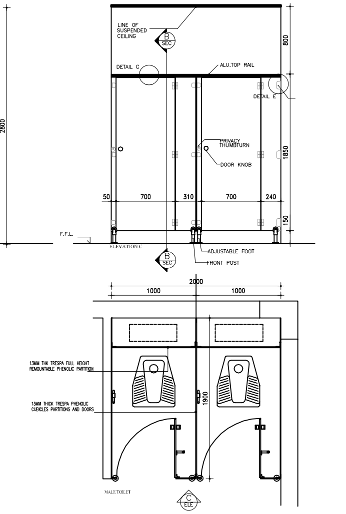

ELEVATION C

MALE TOILET

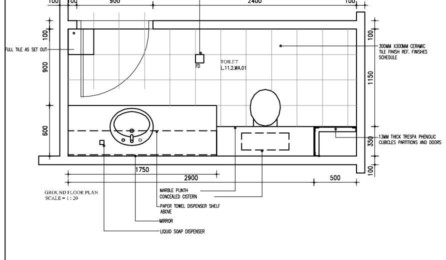

GROUND FLOOR PLAN
SCALE = 1 : 20

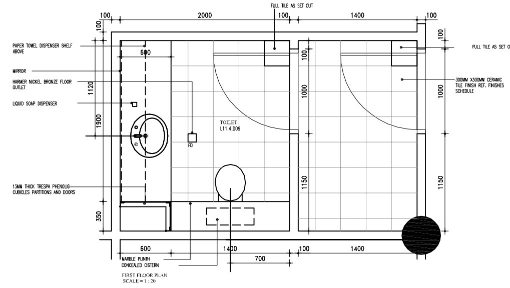

FIRST FLOOR PLAN
SCALE = 1 : 20

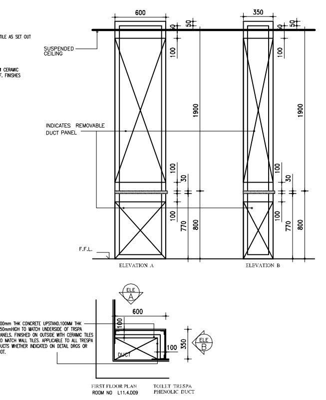
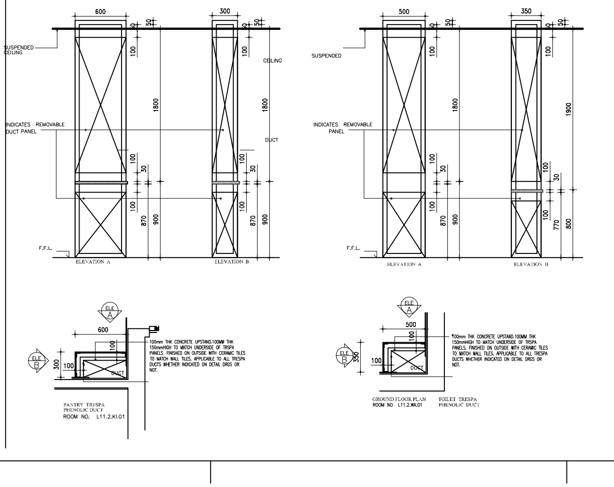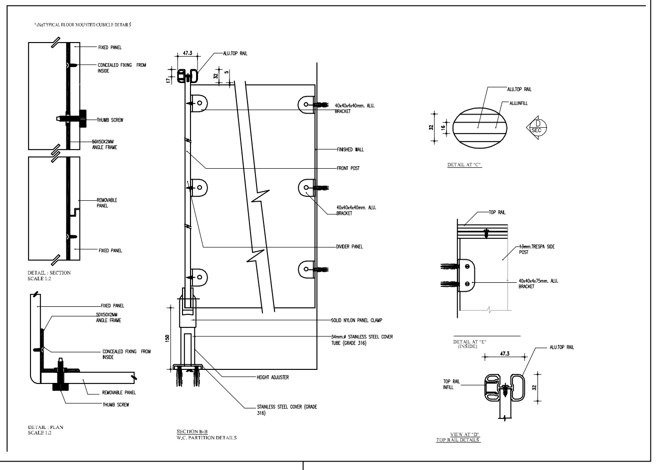
FIRST FLOOR PLAN
ROOM NO L11.4.009
TOILET TRESPA
PHENOLIC DUCT